Pipe reel

Instructions for Use

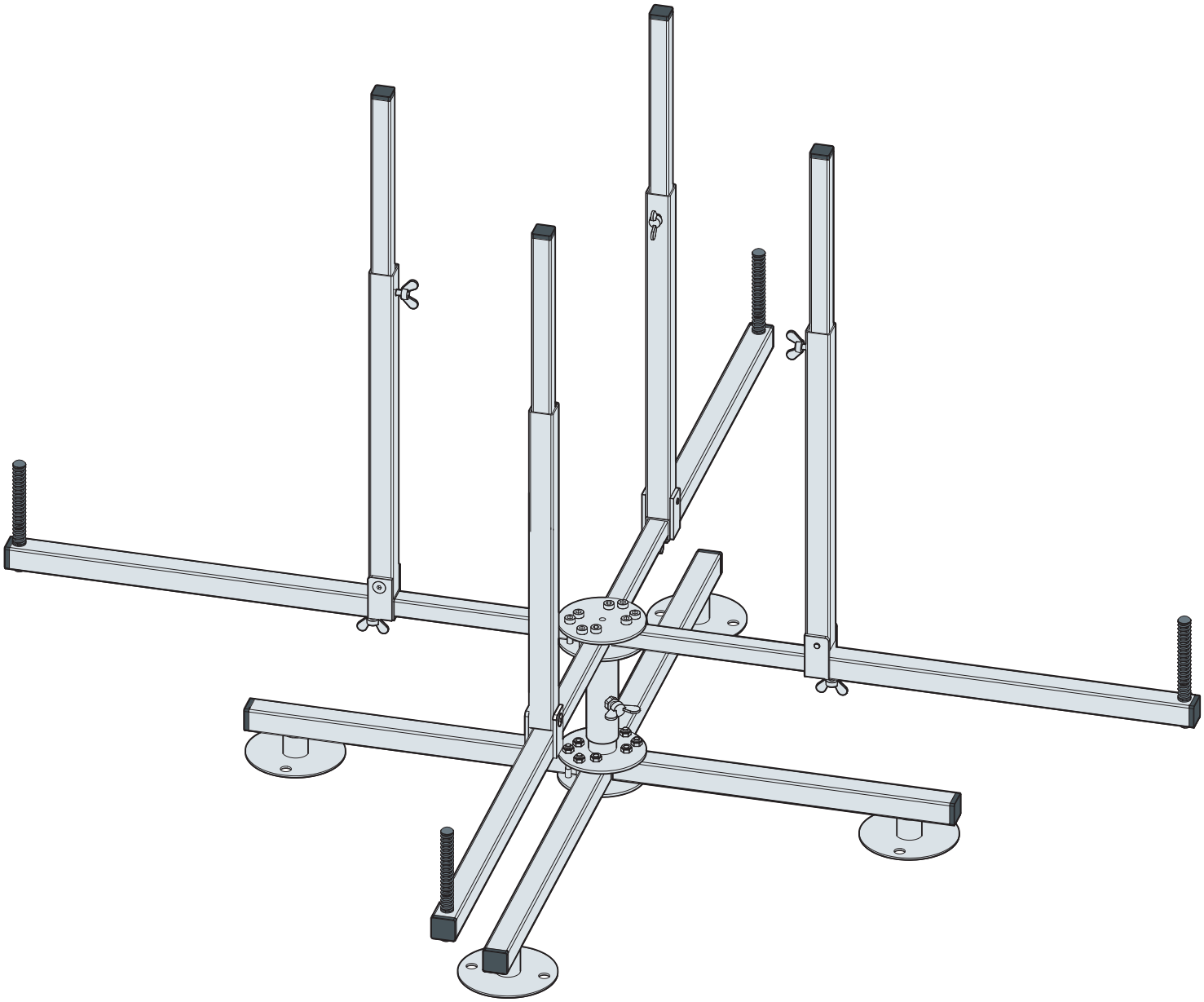

for Fonterra radiant heating and cooling, pipe coils holder

Model
1452.2

Year built:
from 01/2017

en_INT

Table of contents

1 About these instructions for use 4

1.1 Target groups 4
1.2 Labelling of notes 4
1.3 About this translated version 5

2 Product information 6

2.1 Intended use 6
2.2 Product description 6
2.2.1 Functions 6
2.2.2 Overview 6
2.2.3 Technical data 6

3 Handling 7

3.1 Transport and storage 7
3.2 Assembly 7
3.3 Disposal 9

1 About these instructions for use

Trade mark rights exist for this document, further information can be found at *www.viega.com/legal-notices*.

1.1 Target groups

The information in this instruction manual is directed at the following groups of people:

- Heating and sanitary professionals and trained personnel

It is not permitted for individuals without the abovementioned training or qualification to mount, install and, if required, maintain this product. This restriction does not extend to possible operating instructions.

1.2 Labelling of notes

Warning and advisory texts are set aside from the remainder of the text and are labelled with the relevant pictographs.

DANGER!
This symbol warns against possible life-threatening injury.

WARNING!
This symbol warns against possible serious injury.

CAUTION!
This symbol warns against possible injury.

NOTICE!
This symbol warns against possible damage to property.

Notes give you additional helpful tips.

1.3 About this translated version

This instruction for use contains important information about the choice of product or system, assembly and commissioning as well as intended use and, if required, maintenance measures. The information about the products, their properties and application technology are based on the current standards in Europe (e. g. EN) and/or in Germany (e. g. DIN/DVGW).

Some passages in the text may refer to technical codes in Europe/ Germany. These should serve as recommendations in the absence of corresponding national regulations. The relevant national laws, standards, regulations, directives and other technical provisions take priority over the German/European directives specified in this manual: The information herein is not binding for other countries and regions; as said above, they should be understood as a recommendation.

2 Product information

2.1 Intended use

The Fonterra pipe reel is suitable for proper reel-off of floor heating pipes. Optimum handling and easy mounting thanks to wing nut connections.

2.2 Product description

2.2.1 Functions

Features:

- Steel
- Folding, detachable, four-armed, with stabilising spring
- Extending feet with holes for fixing to the floor

2.2.2 Overview

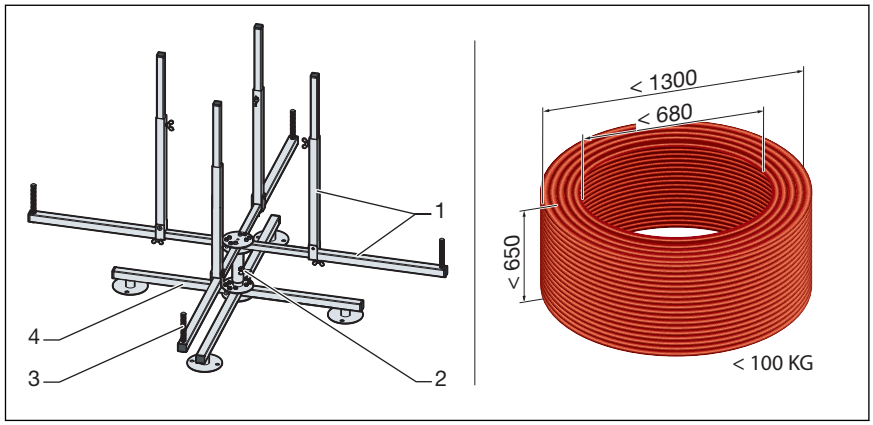

Fig. 1: Pipe reel

1 - Extension with erectable arm
2 - Rotary brake
3 - Pipe limit
4 - Extendable feet for floor fixing

2.2.3 Technical data

Core diameter (variable)	approx. 250–680 mm
Ring height	max. 650 mm
Carrying capacity	max. 100 kg

3 Handling

3.1 Transport and storage

Observe the following with transport and storage:

- Avoid heavy blows and vibrations.
- Store components in a clean and dry place.
- Do not remove the components from the packaging until immediately before use.

3.2 Assembly

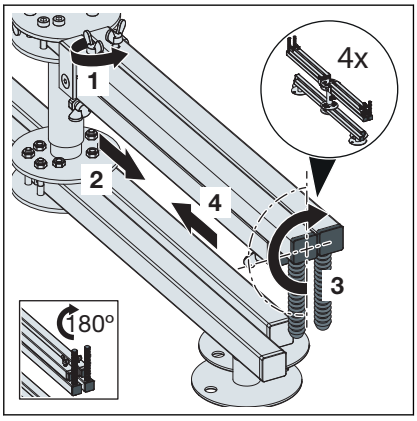

Release the extensions and turn them through 180°. Afterwards the stabilisation springs point up.

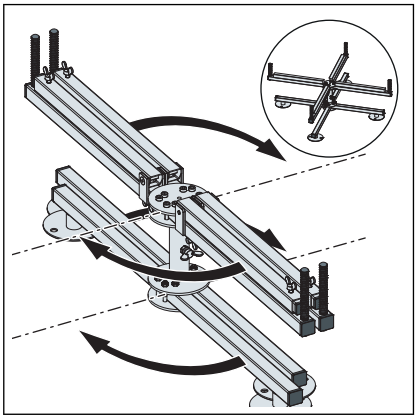

Spread the feet and extensions at a 90° angle.

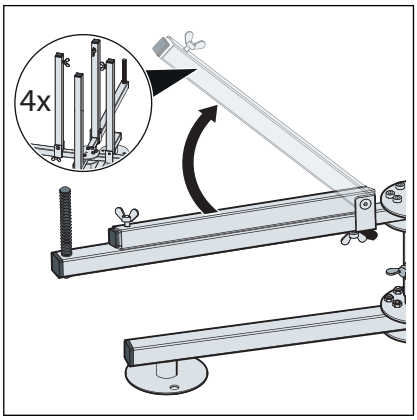

- Put the arm up. Repeat the process for all four extensions.

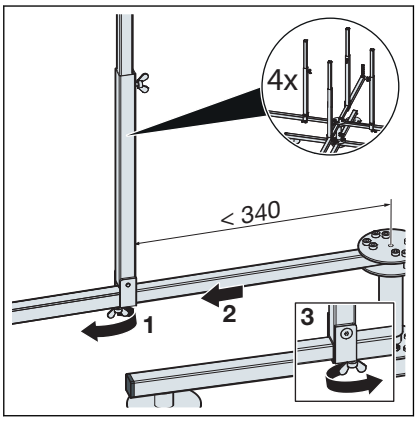

- Loosen the wing screw at the extension (1) and set the desired width (2).
- Next, tighten the wing screw again (3).
- Repeat the process for all four extensions.

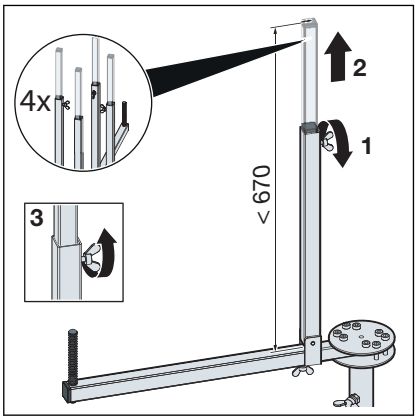

- Loosen the wing screw at the arm (1) and set the extension to the desired height (2).
- Next, tighten the wing screw again (3).
- Repeat the process for all four extensions.

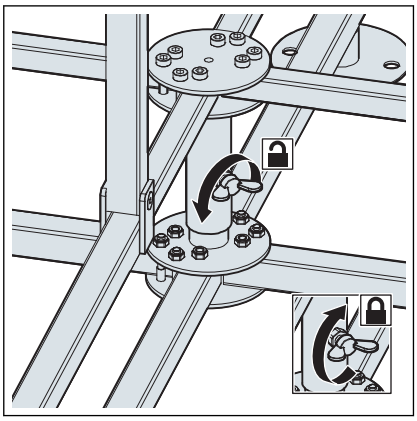

- Use the rotary brake to set the desired turning resistance.

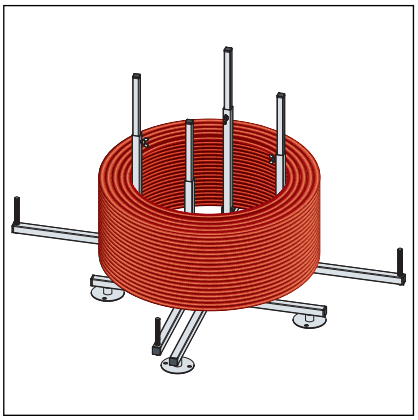

- Place the pipe and pull the extensions outwards until the arms make contact at the inside.

3.3 Disposal

Separate the product and packaging materials (e. g. paper, metal, plastic or non-ferrous metals) and dispose of in accordance with valid national legal requirements.